Radiant Toaster | RT



RT-2

Serve perfectly toasted muffins and bagels for breakfast menu items with the RT-2 Radiant Toaster from Antunes. This unit is the smallest of our radiant toasters and features two toasting lanes for a high toasting capacity without wasting any valuable counterspace.

The front load and front return of the RT-2 allows operators to work quickly and efficiently without wasting any time or energy reaching for product. With an integrated holding zone, operators can keep up with demand even during peak hours.

The RT-2 also features a technologically advanced smart controller that senses product and automatically adjusts the toast time based on volume and operator settings. This ensures the bagels and muffins always have a consistent, high-quality toast, even during barrel runs.

The small footprint allows operations to pair both the RT-2 and VCT-2 bun toaster in the space occupied by the previous single toaster, providing operations with more toasting capacity without reconfiguring the prep line.

FEATURES

- Smart controller senses product and automatically adjusts toast time.
- Consistent toast quality for bagels and muffins even during barrel runs.
- Digital controller allows users to easily adjust toast quality.
- Integrated holding zone.
- Easy to clean.
- Front load and front return.
- Small footprint.

Radiant Toaster | RT

Dimensions

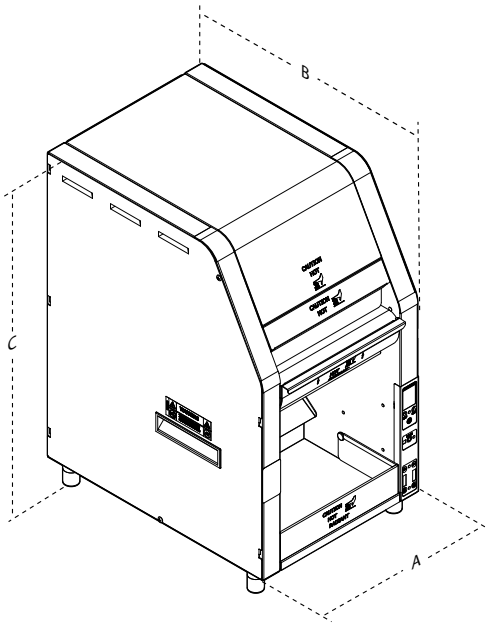

Model & Mfg. No.	Width (A)	Depth (B)	Height (C)
RT-2 9210921	13" (330 mm)	19" (481 mm)	23 1/2" (597 mm)

Electrical Ratings and Plug Configuration

Model & Mfg. No.	Volts	Phase	Watts	Amps	Hertz	Plug Description
RT-2 9210921	230	1	5000	24	50	IEC-309, 32 Amp., 230 VAC, 3 Pin

Specifications

Temperature Control: Solid State with Display

Power Cord: Six-foot grounded power cord supplied

Warranty: One year parts and labor warranty and second year parts only warranty for the drive motor, motor board, current sense board, display board, and main board

P/N 1020490 01/19

Antunes
EXPECT SUCCESS

Antunes delivers a complete range of countertop cooking equipment and water filtration solutions to foodservice operations around the world. Learn more about Antunes and its products at **www.antunes.com**.

Corporate Headquarters
Carol Stream, Illinois
Phone: (630) 784-1000
Toll Free: (800) 253-2991
Fax: (630) 784-1650

China Facility
Suzhou, China
Phone: 86-512-6841-3637
Fax: 86-512-6841-3907