Solar Powered Timers | TTS



DISHES COOKED TO PERFECTION EVERY TIME

Reliable cooking and holding timing powered by the sun. TimeTech ST timers ensure product quality and consistency with cost-effective solar power.

Available in four and eight channel models, these reliable solar timers generate their own electricity. Easy to program and maintain, TimeTech ST timers control up to two stages of your cooking or holding process and provide both audible and visual signals when timing is complete. Program times are stored in memory for repeated use. The magnetic mounting panel adheres to most metal surfaces and allows for flexible use. For those areas where no magnetic surface is available, a mounting bracket is supplied.

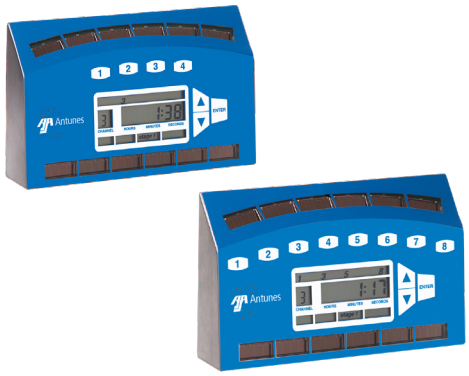

TTS-4 and TTS-8 Solar Powered Timers

Solar Powered
No elecrical outlet required!

Quick and Easy to Install
No tools needed!

Multiple Functionality
Two stages for cooking or holding functions.

Solar Powered Timers | TTS

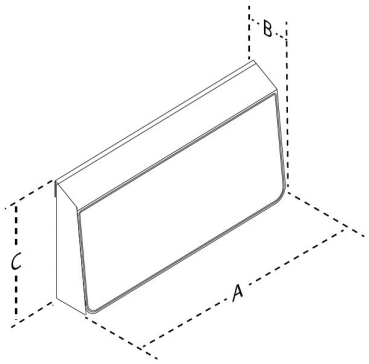

Features:

- Solar powered—no electrical outlet required.
- Quick and easy to install—no tools needed.
- Two stages for cooking or holding functions.
- No net increase in labor.
- Four or eight channel models.
- Easy to use.

Warranty: 90-day manufacturer's warranty.
Note: Timer includes one Universal Mounting Bracket.

Dimensions

Model & Mfg. No.	Description	Number of Channels	Width (A)	Depth (B)	Height (C)	Shipping Weight
TTS-4 9900624	Solar powered and 3 AA Alkaline batteries included.	4	10" (254 mm)	2 1/8" (54 mm)	6 1/8" (156 mm)	4 lbs. (1.8 kg)
TTS-4 9900625	Solar powered and 3 AA Alkaline batteries included. Mounting bracket included.	4	10" (254 mm)	2 1/8" (54 mm)	6 1/8" (156 mm)	4 lbs. (1.8 kg)
TTS-8 9900628	Solar powered and 3 AA Alkaline batteries included.	8	10" (254 mm)	2 1/8" (54 mm)	6 1/8" (156 mm)	4 lbs. (1.8 kg)
TTS-8 9900629	Solar powered and 3 AA Alkaline batteries included. Mounting bracket included.	8	10" (254 mm)	2 1/8" (54 mm)	6 1/8" (156 mm)	4 lbs. (1.8 kg)

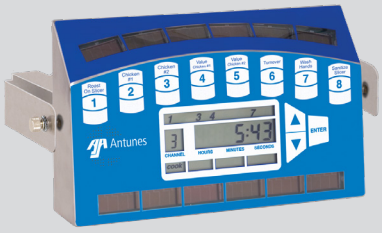

UNIVERSAL MOUNTING BRACKET

The magnetic mounting panel adheres to most metalsurfaces and allows for flexible mounting of the unit. For those areas where no magnetic surface is available, a magnetic mounting bracket is supplied.

Antunes delivers a complete range of countertop cooking equipment, water treatment, digital, and automation solutions to foodservice operations around the world. Learn more at **antunes.com**.

CORPORATE HEADQUARTERS
Carol Stream, Illinois, USA
Phone: +1.630.784.1000
Toll Free: +1.800.253.2991

CHINA FACILITY
Suzhou, China
Phone: +84.512.6841.3637
Fax: +86.512.6841.3907

INDIA FACILITY
57-58 Thattankulam Rd.,
Lotus Colony, J Garden
Madhavaram, Chennai, India 600060