Miracle Steamer | MS



THE STEAMER FOR EXPANDING MENUS

Eliminate long waits and prepare hot menu items quickly and efficiently with the Miracle Steamer. This unit converts plain tap water into super-heated dry steam so foods keep their original textures, colors, flavors, and nutrients.

The Miracle Steamer delivers steam from the top down onto product, making it the perfect piece of equipment for finishing and melting cheese. The amount of steam is always consistent, removing the guesswork and producing a uniform finish from one operator to the next. The Miracle Steamer features two steaming options. For instant steam that quickly reheats items or melts cheese, a simple push of a button releases dry, super-heated steam from the top of the food chamber so heat penetration is very efficient and fast. For items that require longer steaming times, the Miracle Steamer features a digital controller that allows operators to program a timed cycle.



Top-down steamer for finishing, melting cheese, reheating, and steaming a variety of food items.

MS-250 Miracle Steamer

Top-Down Delivery

The intense, top-down heat generated by the Miracle Steamer cooks and reheats food quickly and easily.

Fully Programmable

The Miracle Steamer has a fully programmable timed cycle. Easily adjust the time, number of steam shots, and amount of steam to ensure the best results.

Small Footprint

The Miracle Steamer features a compact design and is available with a direct water hook-up or self-contained water reservoir for flexibility in installation.







MORE EFFICIENT

Steam transfers heat quickly, which means foods are cooked and ready to serve faster. With a consistent amount of steam each time, there's no guesswork and no room for error.

BETTER FINISH

With the Deluxe Food Warmer's steaming process, water molecules in the vapor do not condense or leave foods soaked and dripping. This allows the foods to maintain their original colors so that the final product looks fresh and appetizing.

BETTER TASTE

Cooking with steam means serving foods that tastes as great as they look. Compared with microwave cooking, steam is less destructive, allowing foods to keep their original textures, flavors, and nutrients.



MS-150 Miracle Steamer

Miracle Steamer | MS

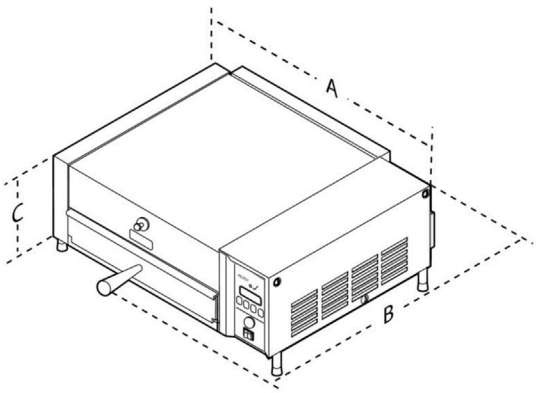

Features:

- Instantly turns plain tap water into super-heated dry steam.
- Prepare a variety of different menu items with a consistent finish each and every time.
- Fully adjustable pulse of steam.
- Programmable steam cycle.
- Available with either a spatula or a drawer for loading product.
- Available with a four-channel programmable timer.

NOTE: Units with a direct water hookup require a water pressure regulator. The psi should be between 20 and 30.

Spatula style with self-contained water reservoir (side)

Model & Mfg. No.	Capacity	Approvals	Plug	Volts	Watts	Amps	Hz.	Width	Depth	Height	Shipping Weight
MS-150 9100420	14" (356 mm) spatula		NEMA 6-20P	208	3300	15.9	50/60	21" (533 mm)	21 3/8" (543 mm)	10 1/4" (260 mm)	58 lbs. (26 kg)
MS-150 9100423	14" (356 mm) elevated spatula		NEMA 5-15P	120	1800	15	50/60	21" (533 mm)	21 3/8" (543 mm)	10 1/4" (260 mm)	58 lbs. (26 kg)
MS-150* 9100443	14" (356 mm) spatula		NEMA 6-20P	208	3300	15.9	50/60	22" (559 mm)	21 3/8" (543 mm)	10 1/4" (260 mm)	58 lbs. (26 kg)
MS-150 9100421	14" (356 mm) spatula	CE	IEC-309	230	3300	14.4	50/60	21" (533 mm)	21 3/8" (543 mm)	10 1/4" (260 mm)	58 lbs. (26 kg)
MS-150 9100428	14" (356 mm) spatula	CE	CEE 7/7	230	3300	14.4	50/60	21" (533 mm)	21 3/8" (543 mm)	10 1/4" (260 mm)	58 lbs. (26 kg)



Model: MS-150

Spatula style with direct water hook-up

MS-250 9100430	14" (356 mm) spatula		NEMA 6-20P	208	3300	15.9	50/60	21" (533 mm)	21 3/8" (543 mm)	9 1/2" (241 mm)	55 lbs. (25 kg)
MS-250 9100438	14" (356 mm) spatula	CE	CEE 7/7	230	3300	14.4	50/60	21" (533 mm)	21 3/8" (543 mm)	9 1/2" (241 mm)	55 lbs. (25 kg)
MS-250† 9100441	14" (356 mm) spatula	CE	IEC-309	230	3300	14.4	50/60	21" (533 mm)	21 3/8" (543 mm)	9 1/2" (241 mm)	55 lbs. (25 kg)



Model: MS-250

Drawer style with self-contained water reservoir (side)

MS-155 9100450	14" (356 mm) drawer		NEMA 6-20P	208	3300	15.9	50/60	21" (533 mm)	17 1/4" (438 mm)	10 1/4" (260 mm)	60 lbs. (27 kg)
MS-155 9100452	14" (356 mm) drawer		NEMA 5-15P	120	1800	15	50/60	21" (533 mm)	17 1/4" (438 mm)	10 1/4" (260 mm)	60 lbs. (27 kg)



Model: MS-155

Dimensions are for item without shipping box. Shipping weight includes item and shipping box. Items highlighted in blue are for international markets.

Drawer style with self-contained water reservoir (front)

Model & Mfg. No.	Capacity	Approvals	Plug	Volts	Watts	Amps	Hz.	Width	Depth	Height	Shipping Weight
MS-355 9100480	14" (356 mm) drawer		NEMA 6-20P	208	3300	15.9	50/60	25 1/4" (641 mm)	17 1/4" (438 mm)	10 1/4" (260 mm)	65 lbs. (29 kg)
MS-355CV 9100486	14" (356 mm) drawer		NEMA 6-20P	230	3300	14.4	50/60	25 1/4" (641 mm)	17 1/4" (438 mm)	10 1/4" (260 mm)	65 lbs. (29 kg)
MS-355 9100482	14" (356 mm) drawer		NEMA 5-15P	120	1800	15	50/60	25 1/4" (641 mm)	17 1/4" (438 mm)	10 1/4" (260 mm)	65 lbs. (29 kg)
MS-355 9100483	14" (356 mm) drawer		NEMA 5-20P	120	1800	15	50/60	25 1/4" (641 mm)	17 1/4" (438 mm)	10 1/4" (260 mm)	65 lbs. (29 kg)



Model: MS-355

Drawer style with direct water hook-up

MS-255 9100460	14" (356 mm) drawer		NEMA 6-20P	208	3300	15.9	50/60	21" (533 mm)	17 1/4" (438 mm)	9 1/2" (241 mm)	60 lbs. (27 kg)
MS-255 9100462	14" (356 mm) drawer		NEMA 5-15P	120	1800	15	50/60	21" (533 mm)	17 1/4" (438 mm)	9 1/2" (241 mm)	60 lbs. (27 kg)



Model: MS-255

* Includes four-channel programmable timer. † Includes extended exhaust system for venting steam.

Miracle Steamer Accessories

Item	Mfg. No.	Description	For Use With
Spatula	7000260	Spatula with large holes in bottom to allow more steam to penetrate food.	MS-150 & MS-250
SMS-200 Stacking Rack	9900005	Rack to stack two units to save space and improve access. Organizes utility lines, protects water pressure regulators, and collects water to single drain hose. 22 1/8" (562 mm) width x 16 1/2" (419 mm) depth x 25 1/2" (648 mm) height.	MS-150, MS-155, MS-250 & MS-255
Single Water Pressure Regulator Kit	7000314	Water pressure regulator assembly for use with one steamer.	All MS models
Dual Water Pressure Regulator Kit	7000235	Water pressure regulator assembly for use with two steamers.	All MS models

CORPORATE HEADQUARTERS
Carol Stream, Illinois, USA
Phone: +1.630.784.1000
Toll Free: +1.800.253.2991

CHINA FACILITY
Suzhou, China
Phone: +84.512.6841.3637
Fax: +86.512.6841.3907

INDIA FACILITY
57-58 Thattankulam Rd.,
Lotus Colony, J Garden
Madhavaram, Chennai, India 600060